M-12930 | 1

CATALOG NUMBER	BODY COLOR	GOTCHA RING COLOR CODE	NPT HUB SIZE	CORD DIA. RANGE	ØA (OVERALL)	(B) [4]	C	ØD (THROAT DIA.)	*E ACROSS CORNERS	*E ACROSS FLATS
SHC2021CR	BLACK	RED	1/2"	.19–.25 [4.7–6.3]	1.32 [33.5]	1.50 [38.1]	.53 [13.5]	.58 [14.7]	1.25 [31.7]	1.12 [28.4]
SHC2022CR	BLACK	WHITE	1/2"	.25–.38 [6.3–9.7]	1.32 [33.5]	1.50 [38.1]	.53 [13.5]	.58 [14.7]	1.25 [31.7]	1.12 [28.4]
SHC2023CR	BLACK	BLUE	1/2"	.38–.50 [9.7–12.7]	1.32 [33.5]	1.50 [38.1]	.53 [13.5]	.58 [14.7]	1.25 [31.7]	1.12 [28.4]
SHC2024CR	BLACK	BROWN	1/2"	.50–.63 [12.7–15.9]	1.32 [33.5]	1.50 [38.1]	.53 [13.5]	.58 [14.7]	1.25 [31.7]	1.12 [28.4]
SHC1019CR	GRAY	GREEN	1/2"	.06–.13 [1.6–3.2]	1.32 [33.5]	1.50 [38.1]	.55 [14.0]	.58 [14.7]	1.25 [31.7]	1.12 [28.4]
SHC1020CR	GRAY	ORANGE	1/2"	.13–.19 [3.2–4.7]	1.32 [33.5]	1.50 [38.1]	.55 [14.0]	.58 [14.7]	1.25 [31.7]	1.12 [28.4]
SHC1021CR	GRAY	RED	1/2"	.19–.25 [4.7–6.3]	1.32 [33.5]	1.50 [38.1]	.55 [14.0]	.58 [14.7]	1.25 [31.7]	1.12 [28.4]
SHC1022CR	GRAY	WHITE	1/2"	.25–.38 [6.3–9.7]	1.32 [33.5]	1.50 [38.1]	.55 [14.0]	.58 [14.7]	1.25 [31.7]	1.12 [28.4]
SHC1023CR	GRAY	BLUE	1/2"	.38–.50 [9.7–12.7]	1.32 [33.5]	1.50 [38.1]	.55 [14.0]	.58 [14.7]	1.25 [31.7]	1.12 [28.4]
SHC1024CR	GRAY	BROWN	1/2"	.50–.63 [12.7–15.9]	1.32 [33.5]	1.50 [38.1]	.55 [14.0]	.58 [14.7]	1.25 [31.7]	1.12 [28.4]

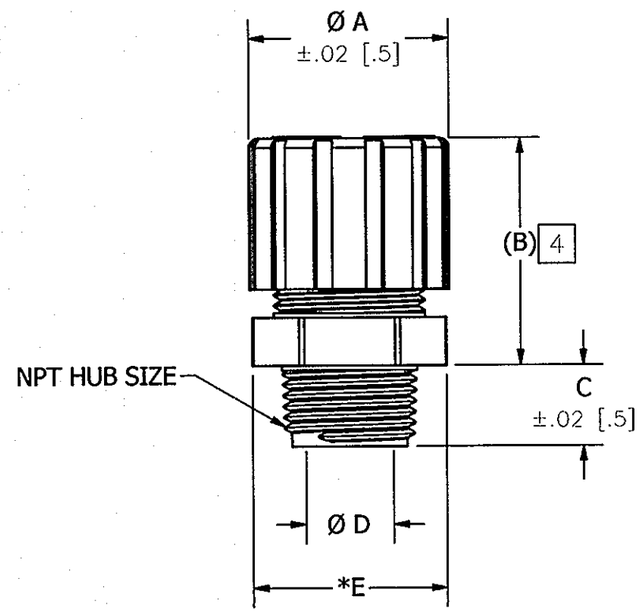

NOTES:

1. DIMENSIONS ARE IN INCHES [MM].
2. LOCKNUT PURCHASED SEPARATELY.
3. BUSHING COATED WITH AMBER PETROLEUM JELLY.

4 REFERENCE ONLY, DIMENSION MAY VARY.

LIST OF PARTS

DESCRIPTION	MATERIAL	FINISH
CORD CONN. BODY, STR. MALE	NYLON	SEE TABLE
NUT	NYLON	SEE TABLE
BUSHING	BLACK NEOPRENE	SEE NOTE 3
GOTCHA RING	NYLON	SEE TABLE

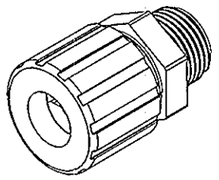

CATALOG NO. SHC2021CR
(NOT SHOWN TO SCALE)

REV	DESCRIPTION	APP	DATE
1	INITIAL RELEASE PER DCN 21189	DDL PJB	05/06/15

THE DESIGN AND DIMENSIONS OF THE PRODUCT SHOWN ON THIS DRAWING ARE SUBJECT TO CHANGE WITHOUT NOTICE

TITLE
STRAIGHT NYLON CORD CONNECTOR FORM 2

TOLERANCES UNLESS OTHERWISE SPECIFIED
.XX = ± .01
.XXX = ± .005
ANGLES = ± 2°

WIRING DEVICE-KELLEMS
HUBBELL INCORPORATED
SHELTON, CT

DR. BY	SR	APP. BY	
TR. BY		SCALE	1:1
CHK. BY	DDL	DATE	05/06/15

DIMENSION SHEET FOR CAT. NO. SEE TABLE

REPAIRABLE ☐ NON-REPAIRABLE ☐

B

M-12930

1

CODE 74545