M-10259 | 1

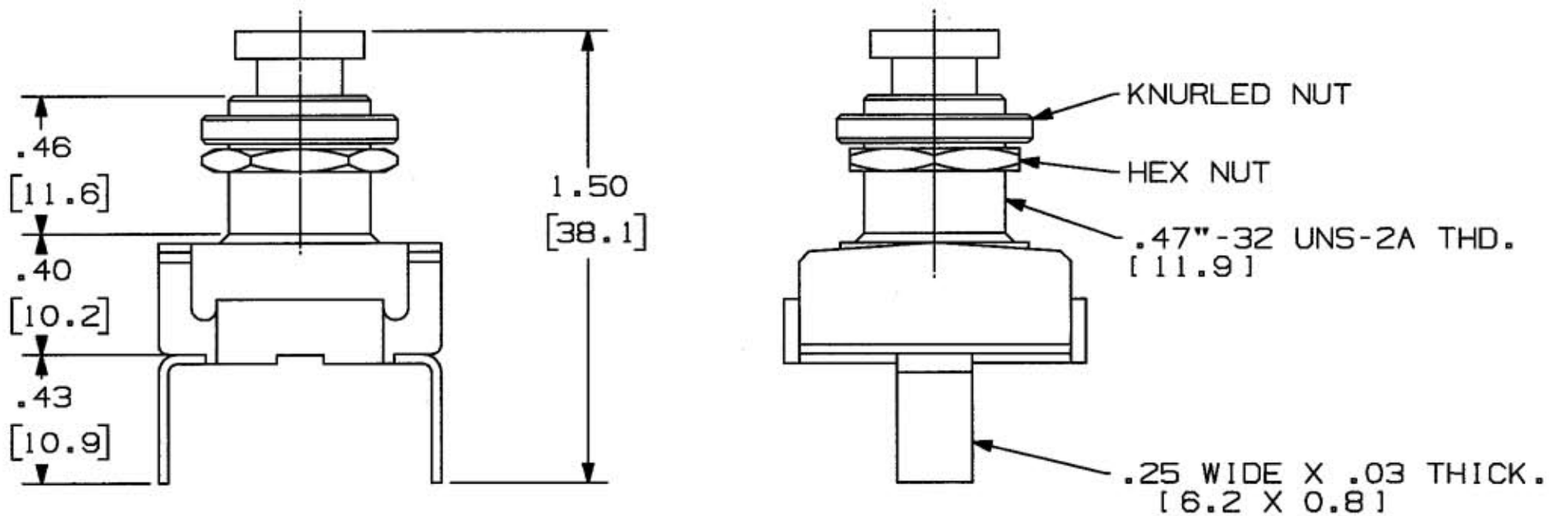

NOTE

1. RECOMMENDED PANEL MOUNT OPENING .50" [12.7mm]
2. DIMENSIONS IN INCHES [MILLIMETERS].
3. SUPPLIED ASSEMBLED WITH:
   (1) .47"-32 THD. KNURLED NUT (BRASS, BLACK OXIDE).
   (1) .47"-32 THD. HEX NUT (BRASS,NICKEL PLATE).
4. RATING: 240VAC 3A
   120VAC 6A
   12 VOLT D.C. (DC RATING MAY NOT BE SHOWN)
   5 AMP. LAMP LOAD

CATALOG NO. MH11

CODE 74545

LIST OF PARTS

DESCRIPTION	MATERIAL	FINISH
REF. D53444		

SYM	REVISIONS	APP	DATE
1	RELEASED PER DCN13301 GPK	JPP	10/20/06

THE DESIGN AND DIMENSIONS OF THE PRODUCT SHOWN ON THIS DRAWING ARE SUBJECT TO CHANGE WITHOUT NOTICE

TITLE MARINE SWITCH
HORN BUTTON
NORMALLY OPEN

TOLERANCES UNLESS OTHERWISE SPECIFIED
FRACTIONS ±1/64
DECIMALS ±.005
ANGLES ±2°

WIRING DEVICE-KELLEMS
HUBBELL INCORPORATED
BRIDGEPORT, CT

DR. BY GPK | APP. BY JPP
TR. BY | SCALE 2=1
CHK'D BY TCM | DATE 10/20/06

DIMENSION SHEET FOR CAT. NO.

REPAIRABLE ☐ NON-REPAIRABLE ☐

B

M-10259

1