M-12239 | 1

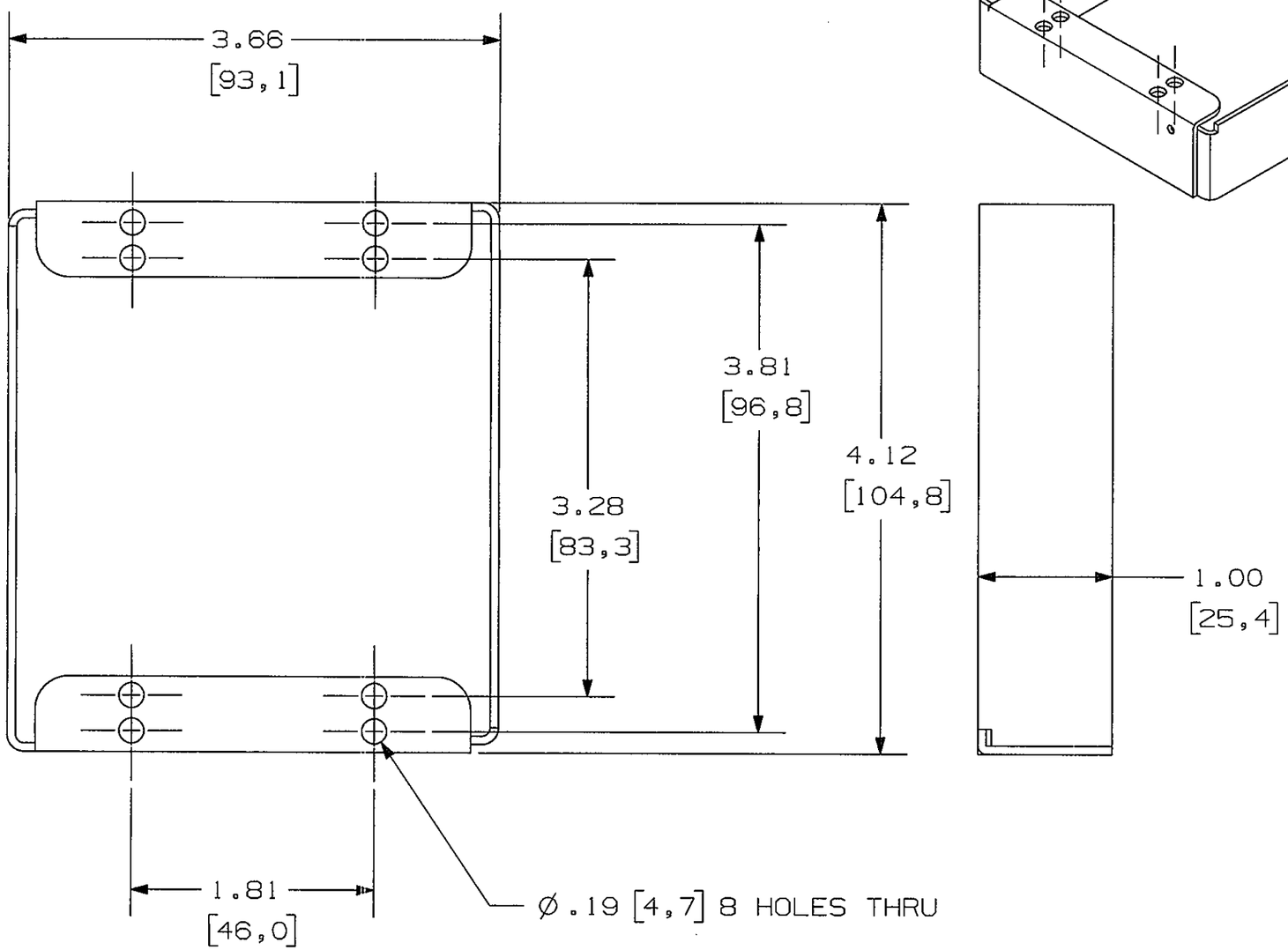

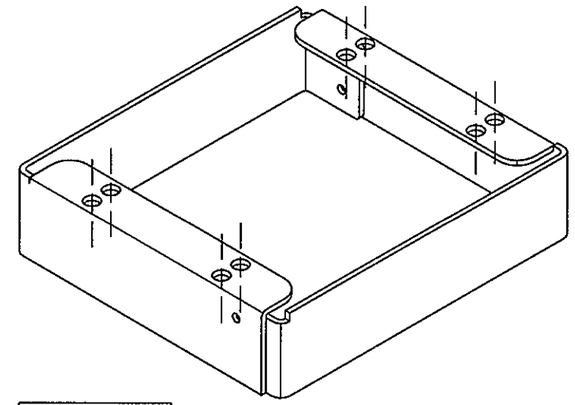

NOTES:
1) ALL DIMENSIONS ARE IN INCHES AND [MILLIMETERS].
2) (4) 6-32 X 1.25 [31.8] LG. MOUNTING SCREWS ARE SUPPLIED. SHIPPED LOOSE, NOT SHOWN.

CODE 74545

LIST OF PARTS

DESCRIPTION	MATERIAL	FINISH
EXTENDER	ZN PLATED STEEL	PAINTED WHITE
FASTENERS	STEEL	ZINC

SYM	REVISIONS	APP	DATE
1	RELEASED PER DCN18825		5/3/12

THE DESIGN AND DIMENSIONS OF THE PRODUCT SHOWN ON THIS DRAWING ARE SUBJECT TO CHANGE WITHOUT NOTICE

TITLE

EXTENDER, 1 INCH [25.4 mm]
8 INCH FRPT

TOLERANCES UNLESS OTHERWISE SPECIFIED
.XX = ±.01
.XXX = ±.005
ANGLES = ±2°

WIRING DEVICE-KELLEMS
HUBBELL INCORPORATED
SHELTON, CT

DR. BY SRE | APP. BY
TR. BY | SCALE 1:2
CHK. BY | DATE 5/3/12

DIMENSION SHEET FOR CAT. NO.
S1R8CSPEXT

REPAIRABLE ☐ NON-REPAIRABLE ☒

B

M-12239

1