SCREW: E0164	MATERIAL: COPPER	REV: Z	
CAT. NO.: LO-600	PLATING: SEE CHART	DRAWN BY: JG	SCALE:1=1
INFORMATION SHEET: FORM 1	MARKING: ILSCO, LO-600, 600MCM-1, CU	DATE: 6/14/2007	SIZE: A

ILSCO connections matter

800-776-9775 www.ilsco.com

DWG. NO. D0522

SHEET: 1 OF 1

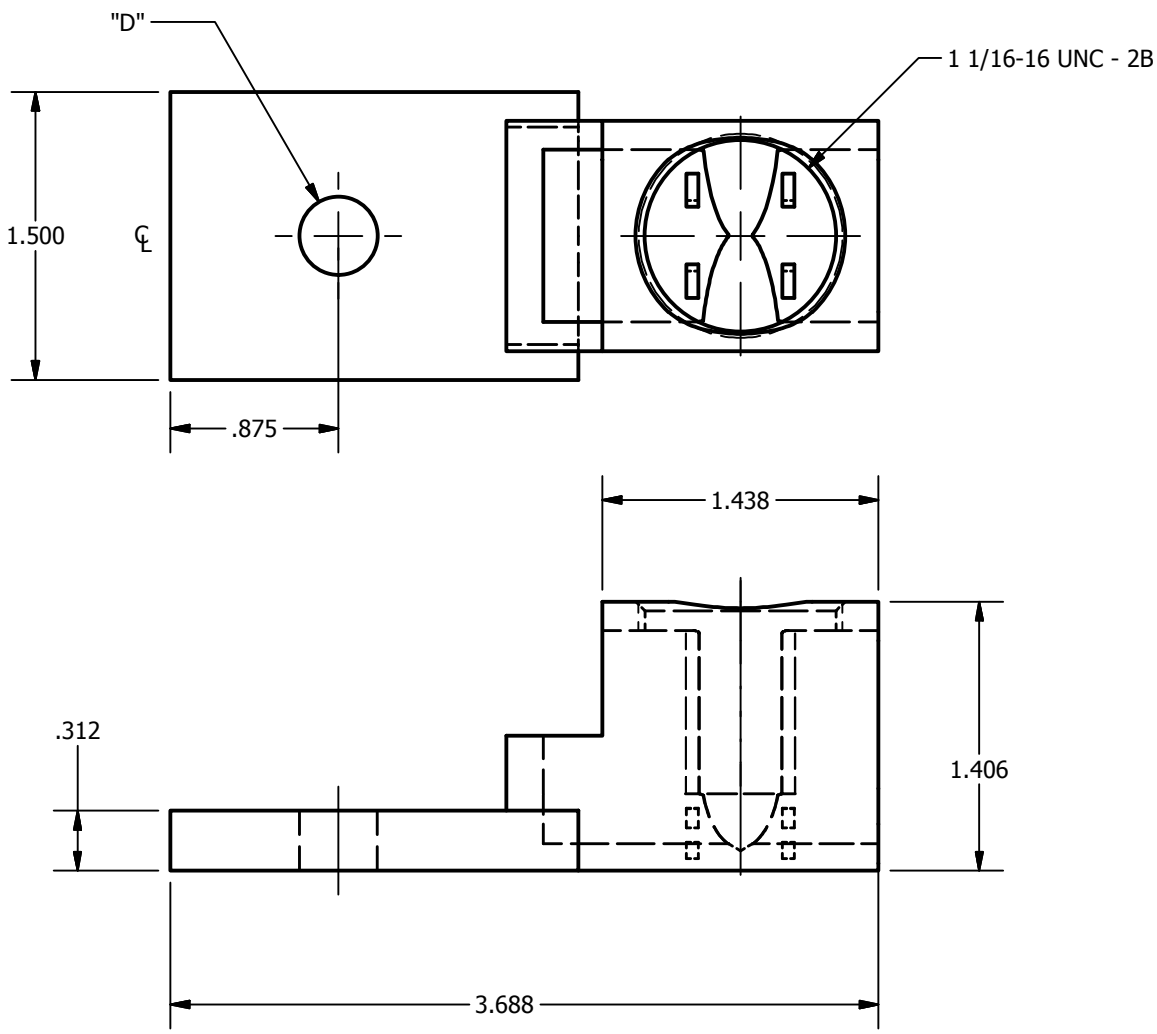

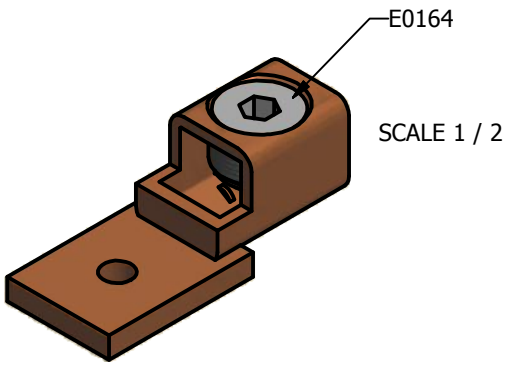

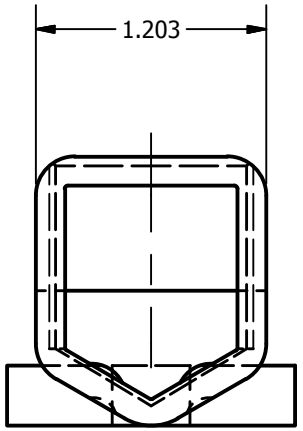

DEV	"D"	SCREW	PLATING
C00B	.406	E0164C00B	BRIGHT DIP
C00T	.406	E0164C00T	EL-TIN
C02T	.562	E0164C00T	EL-TIN
C83T	.531	E0164C00T	EL-TIN

THE INFORMATION CONTAINED WITHIN THIS DOCUMENT IS PROPRIETARY TO ILSCO AND MAY NOT BE DISCLOSED WITHOUT PRIOR WRITTEN CONSENT