© 2021 TE Connectivity. All Rights Reserved.

REVISIONS					
P	LTR	DESCRIPTION	DATE	DWN	APVD
	A	INITIAL RELEASE	23MAR2021	MN	AK

PTS22.5–3040

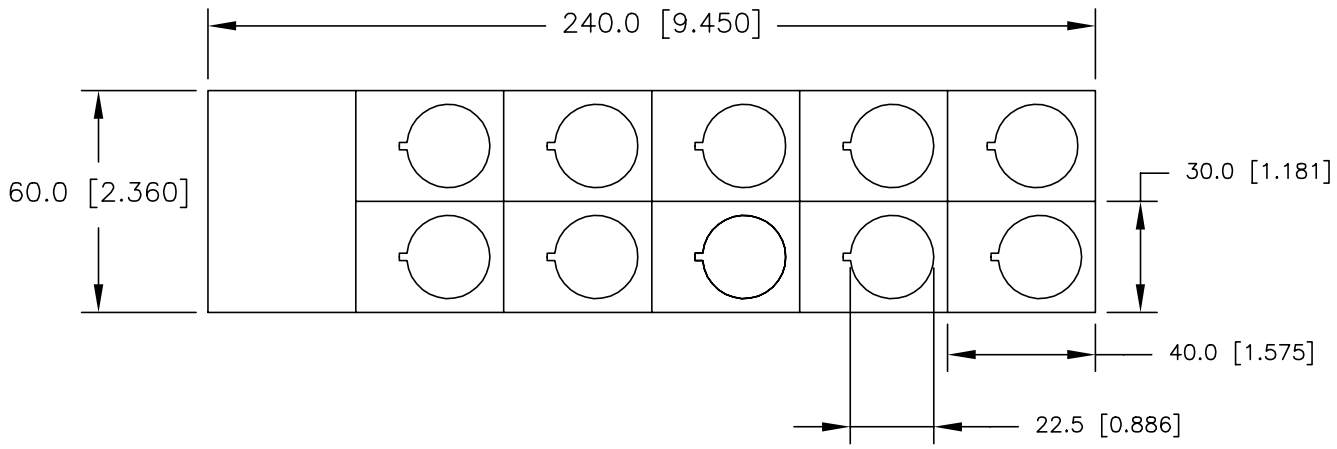

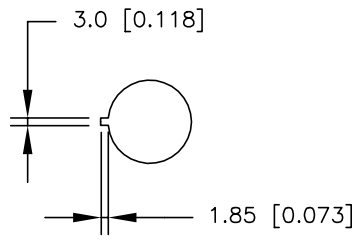

PTS22.5–3040 KEYWAY DETAIL

PTS30.5–5050

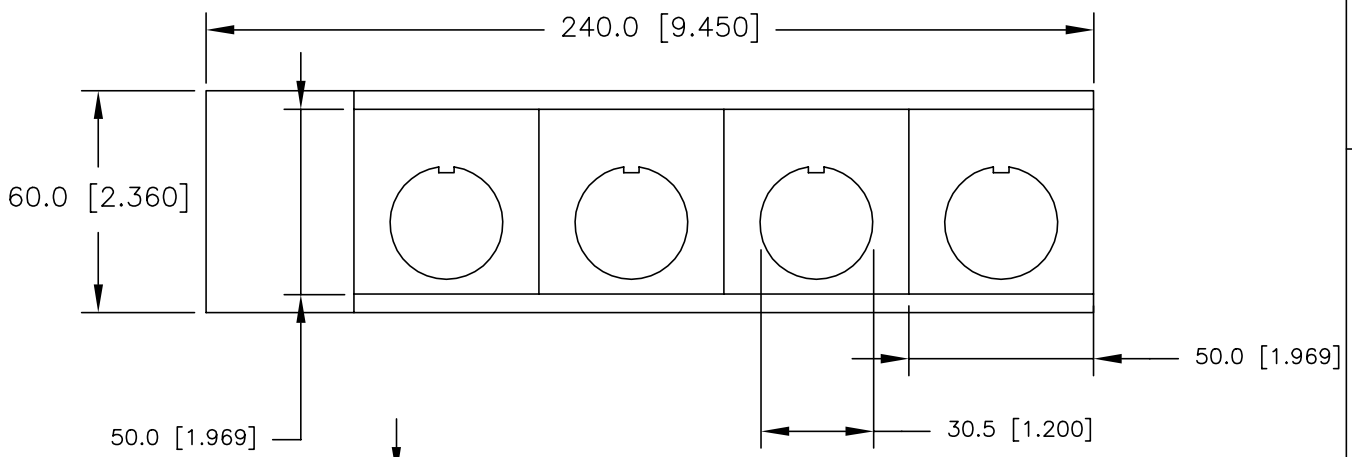

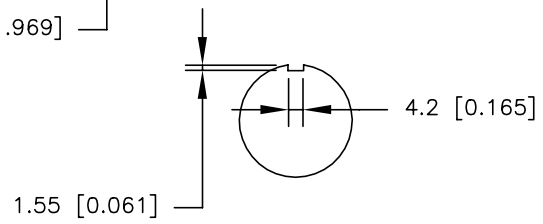

PTS30.5–5050 KEYWAY DETAIL

PTS24.5–5050

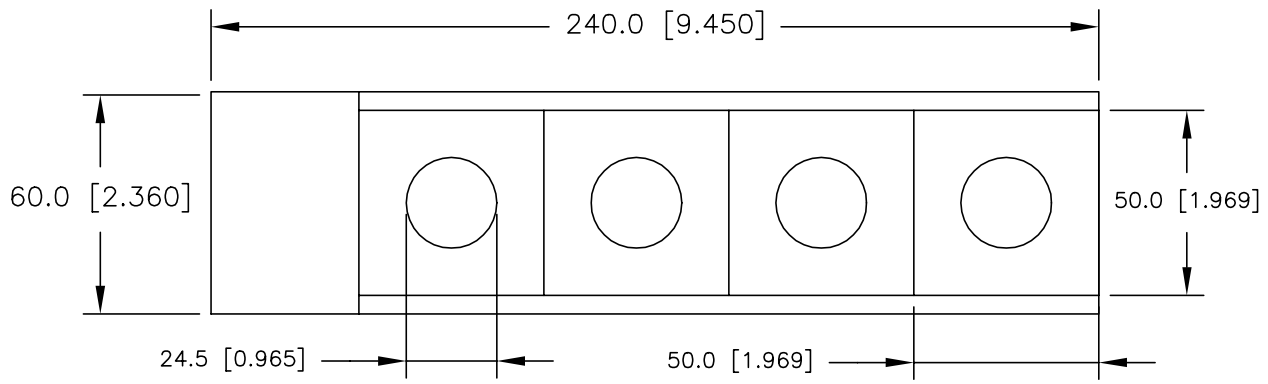

TE Part Number	Description	Hole Diameter	Length	Width	Markers Per Card	Colour	Cards Per Pack	Weight Per Card (g)
1SNA235830R0000	PTS22.5-3040	22.5 [0.886]	40.0 [1.575]	30.0 [1.181]	10	White	44	7.07
1SNA235831R0000	PTS24.5-5050	24.5 [0.965]	50.0 [1.969]	50.0 [1.969]	4	White	44	7.07
1SNA235832R0000	PTS30.5-5050	30.5 [1.200]	50.0 [1.969]	50.0 [1.969]	4	White	44	7.07

MARKER THICKNESS = 0.5 [0.020]

TOLERANCES mm [INCH]	
LABEL HEIGHT:	±0.3 [.012]
LABEL WIDTH:	±0.3 [.012]
WEB WIDTH:	±0.8 [.031]
VERTICAL REPEAT:	±0.8 [.031]*
HORIZONTAL REPEAT:	±0.8 [.031]*
PRINT POSITIONING:	±0.8 [.031]*
LEFT MARGIN:	±0.4 [.016]
QUANTITY:	–0 % +2 %
*NON ACCUMULATING	

THIS DRAWING IS A CONTROLLED DOCUMENT.

DIMENSIONS: mm [INCHES]

TOLERANCES UNLESS OTHERWISE SPECIFIED:
0 PLC ± –
1 PLC ± –
2 PLC ± –
3 PLC ± –
4 PLC ± –
ANGLES ± –

MATERIAL: RIGID PVC

FINISH: –

DWN	M. NUTTALL	30MAR2021
CHK	A. KEAN	30MAR2021
APVD	A. KEAN	30MAR2021
PRODUCT SPEC	—	
APPLICATION SPEC	—	
WEIGHT	SEE TABLE	

CUSTOMER DRAWING

MATERIAL	RIGID PVC

TE Connectivity

NAME: PTS MARKERS – –

SIZE	CAGE CODE	DRAWING NO	RESTRICTED TO
A3	00779	C–PTS MARKERS	—

SCALE	SHEET	REV
NTS	1 OF 1	A

1470–19 (1/15)