SIEMENS

Data sheet 3RF3350-3AA26

Siemens EcoTech

solid-state contactor 1-pole 3RF33 AC-1 50 A 40 °C / 48-600 V / 110-230 V AC / ring cable connection



product brand name	SIRIUS
product designation	solid-state contactor
product type designation	3RF33
manufacturer's article number	
• _1 of the accessories that can be ordered	3RF2900-3PA88
product designation	
• _1 of the accessories that can be ordered	terminal cover
General technical data	
product function	zero-point switching
product feature	high blocking voltage
power loss [V·A] maximum	47 V·A
power loss [W] for rated value of the current	
• at AC in hot operating state	47 W
• at AC in hot operating state per pole	47 W
• without load current share typical	3.5 W
type of calculation of power loss current-dependent	linear
insulation voltage rated value	600 V
degree of pollution	3
surge voltage resistance of main circuit rated value	6 kV
protection class IP	IP00
protection class IP on the front according to IEC 60529	IP00
shock resistance according to IEC 60068-2-27	15 g / 11 ms
vibration resistance according to IEC 60068-2-6	2 g
reference code according to IEC 81346-2	Q
Substance Prohibitance (day/month/year)	01/15/2024
SVHC substance name	Lead CAS-No. 7439-92-1 Lead monoxide (lead oxide) CAS-No. 1317-36-8 2-methyl-1-(4-methylthiophenyl)-2-morpholinopropan-1-one CAS-No. 71868-10-5 Melamine CAS-No. 108-78-1
Net Weight	0.296 kg
Main circuit	
number of poles for main current circuit	1
number of NO contacts for main contacts	1
number of NC contacts for main contacts	0
type of voltage of the operating voltage	AC
operating voltage	

Subject to change without notice
© Copyright Siemens

● at AC	
— at 50 Hz rated value	48 ... 600 V
— at 60 Hz rated value	48 ... 600 V
operating frequency rated value	50 ... 60 Hz
relative symmetrical tolerance of the operating frequency	10 %
operating range relative to the operating voltage at AC	
● at 50 Hz	40 ... 660 V
● at 60 Hz	40 ... 660 V
operational current rated value maximum	50 A
operational current	
● at AC-1 at 400 V rated value	50 A
● at AC-51 rated value	50 A
● at AC-51 according to IEC 60947-4-3	50 A
● according to UL 508 rated value	43 A
ampacity maximum	50 A
operational current minimum	500 mA
rate of voltage rise at the thyristor for main contacts maximum permissible	1 000 V/µs
blocking voltage at the thyristor for main contacts maximum permissible	1 600 V
reverse current of the thyristor	10 mA
derating temperature	40 °C
surge current resistance rated value	1 300 A
I2t value maximum	8 000 A²·s
Control circuit/ Control	
type of voltage of the control supply voltage	AC
control supply voltage at AC	
● at 50 Hz	110 ... 230 V
● at 60 Hz	110 ... 230 V
control supply voltage 1 at AC	
● at 50 Hz	110 ... 230 V
● at 60 Hz	110 ... 230 V
control supply voltage at AC	
● at 50 Hz full-scale value for signal<0> recognition	40 V
● at 60 Hz full-scale value for signal<0> recognition	40 V
● initial value for signal <1> detection	90 V
control supply voltage frequency	
● 1 rated value	50 Hz
● 2 rated value	60 Hz
symmetrical line frequency tolerance	5 Hz
operating range factor control supply voltage rated value at AC at 50 Hz	
● initial value	0.82
operating range factor control supply voltage rated value at AC at 60 Hz	
● initial value	0.82
control current at minimum control supply voltage	
● at AC	2 mA
control current at AC rated value	15 mA
ON-delay time	40 ms; additionally max. one half-wave
OFF-delay time	40 ms; additionally max. one half-wave
Installation/ mounting/ dimensions	
fastening method side-by-side mounting	Yes
fastening method	screw fixing and snap-on mounting on standard mounting rail 35 mm according to IEC 60715
design of the thread of the screw for securing the equipment	M4
height	100 mm
width	50 mm
depth	133 mm

Subject to change without notice
© Copyright Siemens

Connections/ Terminals	
product component removable terminal for auxiliary and control circuit	Yes
type of electrical connection	
● for main current circuit	Ring cable lug connection
● for auxiliary and control circuit	screw-type terminals
type of connectable conductor cross-sections	
● for main contacts for JIS cable lug	JIS C 2805 R 2-5, 5,5-5, 8-5, 14-5
● for AWG cables for main contacts	1x (12 ... 4)
● for DIN cable lug for main contacts	DIN 46234-5-2,5, -5-6, -5-10, -5-16, -5-25
type of connectable conductor cross-sections	
● for auxiliary and control contacts	
— solid	1x (0.5 ... 2.5 mm²), 2x (0.5 ... 1 mm²)
— finely stranded with core end processing	1x (0.5 ... 2.5 mm²), 2x (0.5 ... 1 mm²)
— finely stranded without core end processing	1x (0.5 ... 2.5 mm²), 2x (0.5 ... 1 mm²)
● for AWG cables for auxiliary and control contacts	1x (20 ... 12)
AWG number as coded connectable conductor cross section for main contacts	12 ... 4
tightening torque	
● for main contacts with screw-type terminals	2 ... 2.5 N·m
● for auxiliary and control contacts with screw-type terminals	0.5 ... 0.6 N·m
tightening torque [lbf·in]	
● for auxiliary and control contacts with screw-type terminals	4.5 ... 5.3 lbf·in
design of the thread of the connection screw	
● for main contacts	M5
● of the auxiliary and control contacts	M3
stripped length of the cable	
● for main contacts	10 mm
● for auxiliary and control contacts	7 mm
type of grounding	grounding heat sink by means of screw-type terminal
UL/CSA ratings	
operational current according to UL 508 rated value	43 A
Electrical Safety	
touch protection on the front according to IEC 60529	finger-safe, for vertical contact from the front with cover
Ambient conditions	
installation altitude at height above sea level maximum	1 000 m
ambient temperature	
● during operation	-25 ... +60 °C
● during storage	-55 ... +80 °C
Electromagnetic compatibility	
conducted interference	
● due to burst according to IEC 61000-4-4	2 kV / 5 kHz, behavior criterion 2
● due to conductor-earth surge according to IEC 61000-4-5	2 kV, behavior criterion 2
● due to conductor-conductor surge according to IEC 61000-4-5	1 kV, behavior criterion 2
● due to high-frequency radiation according to IEC 61000-4-6	140 dBuV in the frequency range 0.15 ... 80 MHz, behavior criterion 1
field-based interference according to IEC 61000-4-3	80 MHz ... 1 GHz 10 V/m, behavior criterion 1
electrostatic discharge according to IEC 61000-4-2	4 kV contact discharging / 8 kV air discharging, behavior criterion 2
conducted HF interference emissions according to CISPR11	Class A for industrial environment
field-bound HF interference emission according to CISPR11	Class B for the domestic, business and commercial environments
Short-circuit protection, design of the fuse link	
manufacturer's article number	
● of full range R fuse link for semiconductor protection at NH design usable	3NE8717-1
● of gS fuse for semiconductor protection at NH design usable	3NE1817-0
● of back-up R fuse link for semiconductor protection at NH design usable	3NE8817-0MK

Subject to change without notice
© Copyright Siemens

● of back-up R fuse link for semiconductor protection at cylindrical design 14 x 51 mm usable	3NC1450
● of back-up R fuse link for semiconductor protection at cylindrical design 22 x 58 mm usable	3NC2280
manufacturer's article number of the gG fuse	
● at NH design usable	3NA6812; These fuses have a smaller rated current than the semiconductor relays
● at NH design usable note	These fuses have a smaller rated current than the semiconductor relays

Approvals Certificates

Environment	General Product Approval			
Environmental Confirmations				

EMV	Test Certificates	other		
RCM	Type Test Certificates/Test Report	Confirmation	产品合格 QC PASS	Confirmation

Further information

Information on the packaging
https://support.industry.siemens.com/cs/ww/en/view/109813875
Information for data generation and storage
https://support.industry.siemens.com/cs/ww/en/view/109995012
Information- and Downloadcenter (Catalogs, Brochures,…)
https://www.siemens.com/ic10
Industry Mall (Online ordering system)
https://mall.industry.siemens.com/mall/en/en/Catalog/product?mlfb=3RF3350-3AA26
Cax online generator
https://support.automation.siemens.com/WW/CAXorder/default.aspx?lang=en&mlfb=3RF3350-3AA26
Service&Support (Manuals, Certificates, Characteristics, FAQs,...)
https://support.industry.siemens.com/cs/ww/en/ps/3RF3350-3AA26
Image database (product images, 2D dimension drawings, 3D models, device circuit diagrams, EPLAN macros, ...)
https://www.automation.siemens.com/bilddb/cax_de.aspx?mlfb=3RF3350-3AA26&lang=en

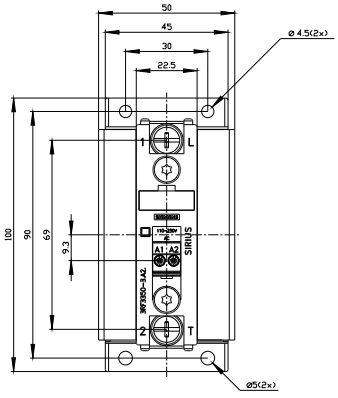

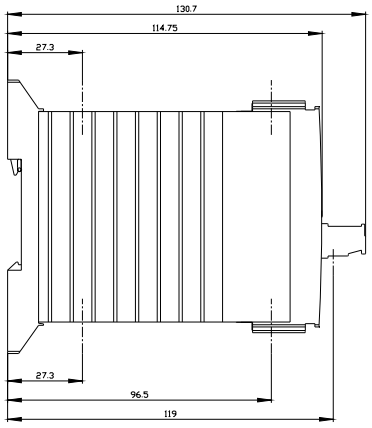

Subject to change without notice
© Copyright Siemens

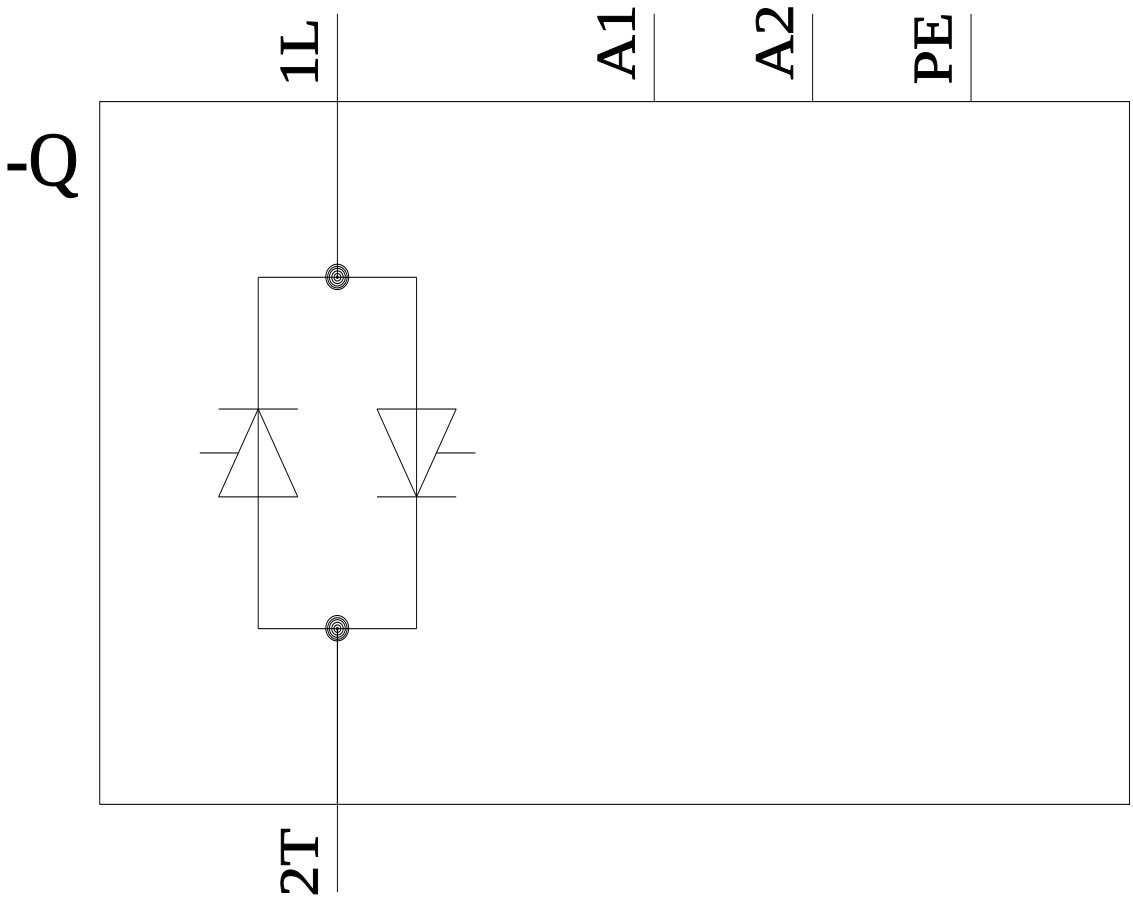

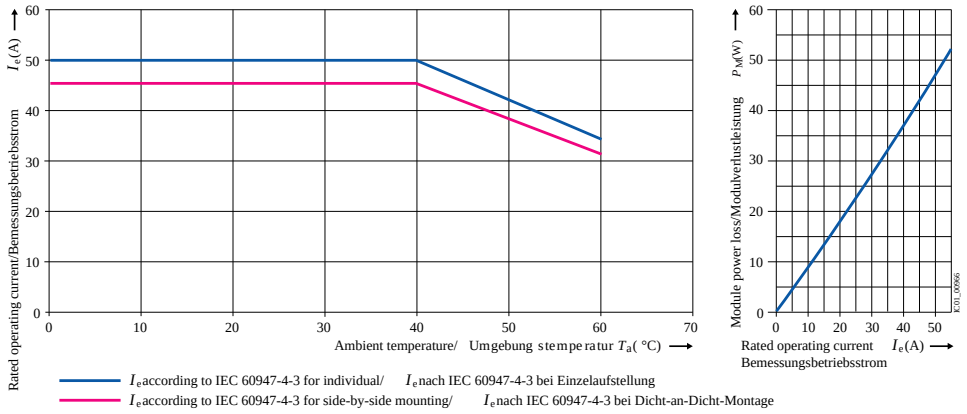

last modified: 7/11/2026

Subject to change without notice
© Copyright Siemens