SINCE 1945 KEYSTONE LIGHT MADE EASY™

EXTERNAL DRIVE LED
TYPE C LED TUBES

KT-LED12T8-36G-8XX-E
T8 LED LAMP

DESCRIPTION
12W T8 LED Tube | Type C | 3000–5000K | >83 CRI | 0–10V Dimming

CLASSIFIED c UL us · DLC LISTED · RoHS Compliant · TRUSTED NB3 · 5 YEAR WARRANTY

LAMP TYPE: Linear
BULB TYPE: T8 LED
BASE TYPE: G13 (Medium Bi-Pin)
DIMMING TYPE: 0–10V
WATTAGE: 12W
LAMP INPUT VOLTAGE: 36–45Vdc
COLOR TEMPERATURE: 3000–5000K
COLOR RENDERING INDEX (CRI): >83

PRODUCT FEATURES
- Compatible with Keystone external drive LED drivers
- Replacement for conventional fluorescent lamps
- 50,000+ hour lifetime
- Type C application for custom installations and maximum efficiency
- Environmentally friendly: No mercury used
- Instant startup
- Frosted glass eliminates pixelation
- UL Classified (pending)
- Operating temperature: –20ºC/–4ºF to 45ºC/113ºF
- 120+ lumens per watt

OPERATING SPECIFICATIONS

		KTLD-1LT8-UV-12C-VDIM												
		KTLD-2LT8-UV-12C-VDIM						KTLD-4LT8-UV-12C-VDIM						
		1 Lamp			2 Lamps			3 Lamps			4 Lamps			
Catalog Number	Color Temp.	Nominal Input Power	Nominal Lumens	Nominal Efficacy	Nominal Input Power	Nominal Lumens	Nominal Efficacy	Nominal Input Power	Nominal Lumens	Nominal Efficacy	Nominal Input Power	Nominal Lumens	Nominal Efficacy	Power Factor
KT-LED12T8-36G-830-E	3000K	13W	1,630	125 lm/W	26W	3,260	125 lm/W	39W	4,890	125 lm/W	52W	6,520	125 lm/W	>0.9
KT-LED12T8-36G-835-E	3500K	13W	1,680	129 lm/W	26W	3,360	129 lm/W	39W	5,040	129 lm/W	52W	6,720	129 lm/W	>0.9
KT-LED12T8-36G-840-E	4000K	13W	1,730	133 lm/W	26W	3,460	133 lm/W	39W	5,190	133 lm/W	52W	6,920	133 lm/W	>0.9
KT-LED12T8-36G-850-E	5000K	13W	1,780	137 lm/W	26W	3,560	137 lm/W	39W	5,340	137 lm/W	52W	7,120	137 lm/W	>0.9

SPECTRAL DISTRIBUTION

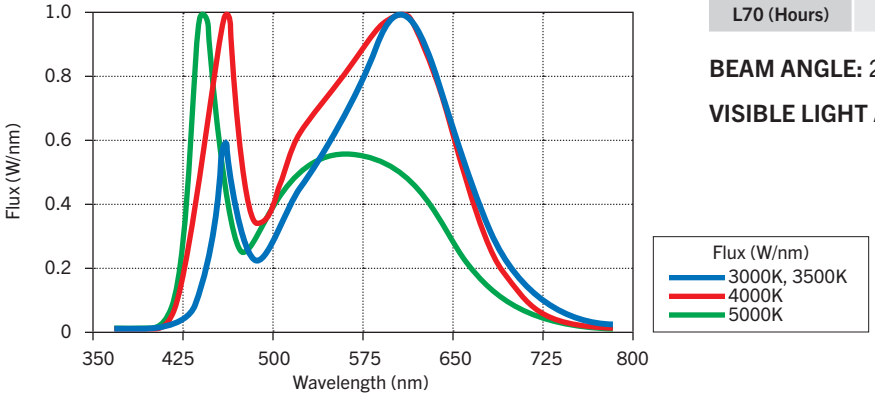

RATED LIFE

L70 (Hours)	50,000

BEAM ANGLE: 240º

VISIBLE LIGHT AREA: 325º

KEYSTONE SINCE 1945 LIGHT MADE EASY™

EXTERNAL DRIVE LED
TYPE C LED TUBES

KT-LED12T8-36G-8XX-E

T8 LED LAMP

PHYSICAL SPECIFICATIONS

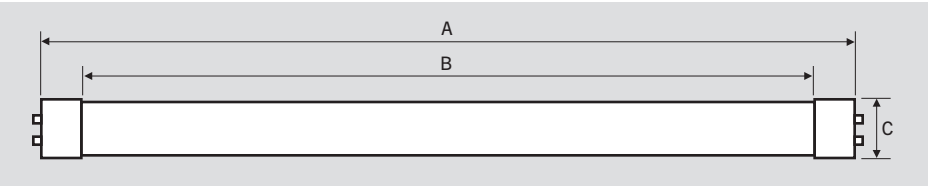

LAMP DIMENSIONS

A (Body Length)	35.19"
B (Illuminated Length)	32.36"
C (Diameter)	1.00"

NOMINAL LENGTH: 36"

BASE TYPE: G13 (Medium Bi-Pin)

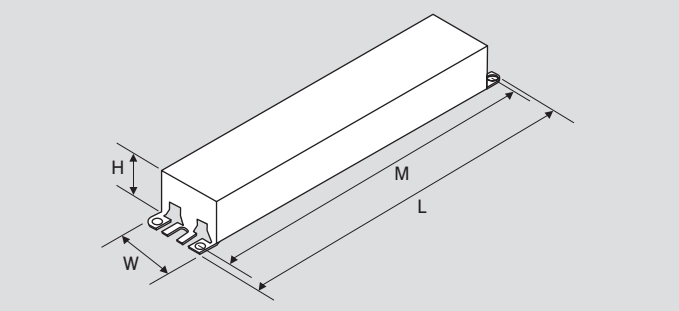

DRIVER DIMENSIONS

KTLD-1LT8-UV-12C-VDIM		KTLD-2LT8-UV-12C-VDIM		KTLD-4LT8-UV-12C-VDIM	
Length (L)	9.50"	Length (L)	9.50"	Length (L)	9.60"
Width (W)	1.30"	Width (W)	1.30"	Width (W)	1.80"
Height (H)	1.10"	Height (H)	1.10"	Height (H)	1.30"
Mounting (M)	8.90"	Mounting (M)	8.90"	Mounting (M)	8.90"

WIRING DIAGRAMS

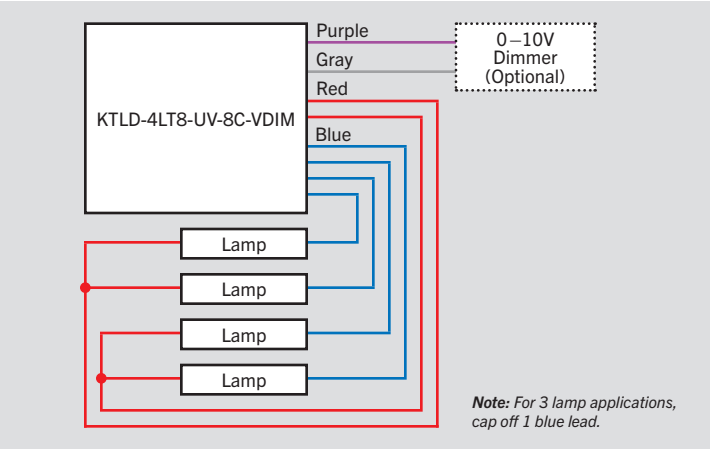

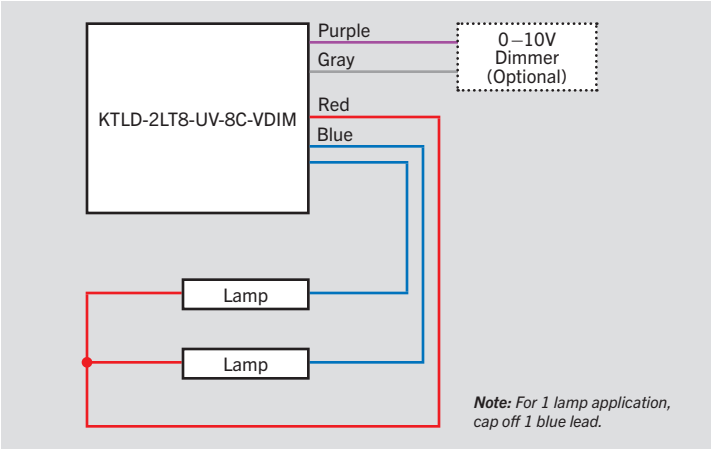

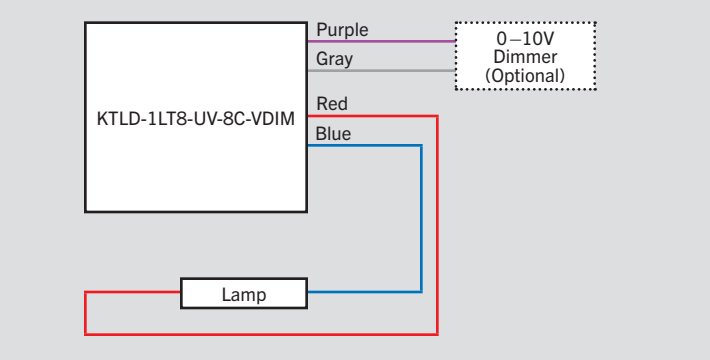

KEYSTONE SINCE 1945 LIGHT MADE EASY™

EXTERNAL DRIVE LED
TYPE C LED TUBES

KT-LED12T8-36G-8XX-E

T8 LED LAMP

ORDERING INFORMATION

ORDER CODE	PACK QTY.	UPC	EASY CODE	DLC PRODUCT ID
KT-LED12T8-36G-835-E	25	843654120812	ATI-11	P3O93I4S
KT-LED12T8-36G-840-E	25	843654120829	OVQ-61	PMC9I0MM
KT-LED12T8-36G-850-E	25	843654120836	RYK-47	P4LA9CEQ

CATALOG NUMBER BREAKDOWN

KT-	LED	12	T8-	36	G-	8	XX-	E
1	2	3	4	5	6	7	8	9

1 Keystone Technologies
2 LED Lamp
3 Wattage
4 Lamp Type
5 Nominal Length (Inches)
6 Glass Construction
7 80 CRI
8 Color Temperature
9 External Drive Series