KEYSTONE SINCE 1945

DIRECTDRIVE DX2

SINGLE- OR DOUBLE-ENDED LINE VOLTAGE LED TUBES

KT-LED25T8-48G-8XX-DX2

T8 LED LAMP

RoHS Compliant

10 YEAR LIMITED WARRANTY

DESCRIPTION

25W T8 LED | 3000–6500K | >83 CRI | High-Efficiency | Single- or Double-ended Wiring

LAMP TYPE: Linear

BULB TYPE: T8

BASE TYPE: G13 (Medium Bi-Pin)

WATTAGE: 25W

COLOR TEMPERATURE: 3000–6500K

COLOR RENDERING INDEX (CRI): >83

WARRANTY: 10 Years



PRODUCT FEATURES

- Replacement for conventional fluorescent lamp
- Single- or double-ended wiring
- 50,000+ hour lifetime
- Approximately 40% more energy efficient than standard F32T8 lamps
- Environmentally friendly: No mercury used
- Instant startup
- Frosted lens eliminates pixelation
- UL Classified
- Operating temperature: –20ºC/–4ºF to 45ºC/113ºF
- Integral driver (isolated) eliminates the need for external driver or ballast
- 110+ Lumens per Watt
- Lamp is dimmable when used with an appropriate dimming accessory (purchased separately). Contact Keystone for more details to find out what is best for the intended application.
- Not for use in sealed / vapor tight fixtures

ELECTRICAL AND PERFORMANCE SPECIFICATIONS

Catalog Number	Input Voltage	Power Consumption	Color Temperature (CCT)	Luminous Flux	Efficacy	Beam Angle	Visible Light Area	Power Factor	Input Current	Rated Life
KT-LED25T8-48G-830-DX2	120–277 Vac	25W	3000K	3000 lm	120 lm/W	240º	325º	>0.9	0.20A @ 120V 0.09A @ 277V	L70 (Hours) 50,000
KT-LED25T8-48G-835-DX2			3500K	3000 lm	120 lm/W					
KT-LED25T8-48G-840-DX2			4000K	2900 lm	116 lm/W					
KT-LED25T8-48G-850-DX2			5000K	3000 lm	120 lm/W					
KT-LED25T8-48G-865-DX2			6500K	-	-					

SPECTRAL DISTRIBUTION

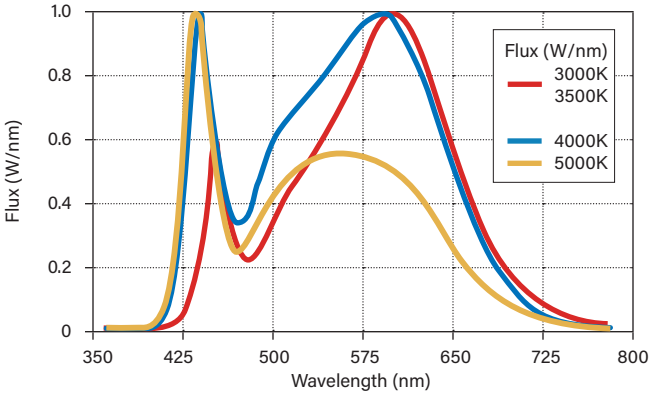

POLAR CANDELA DISTRIBUTION

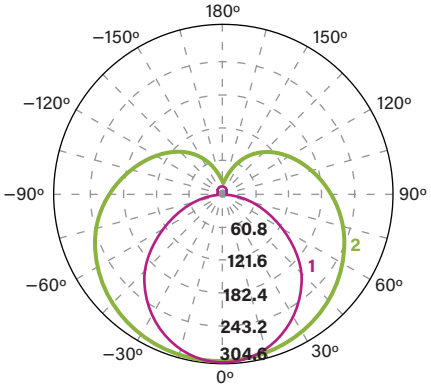

Maximum Candela = 1248.55

Located at **Horizontal Angle** = 0, **Vertical Angle** = 0

1 **Violet** Vertical Plane through Horizontal Angles (90–270)

2 **Green** Vertical Plane through Horizontal Angles (0–180)

KEYSTONE SINCE 1945 | DIRECT DRIVE DX2

SINGLE- OR DOUBLE-ENDED LINE VOLTAGE LED TUBES

KT-LED25T8-48G-830-DX2

T8 LED LAMP

SINGLE-ENDED WIRING DIAGRAM

1. Cut all existing connections to ballast as shown below and remove ballast. See *Figure A* for typical ballast configurations. **Note: Single-ended wiring requires non-shunted lampholders.**

FIGURE A **TYPICAL BALLAST CONFIGURATIONS**

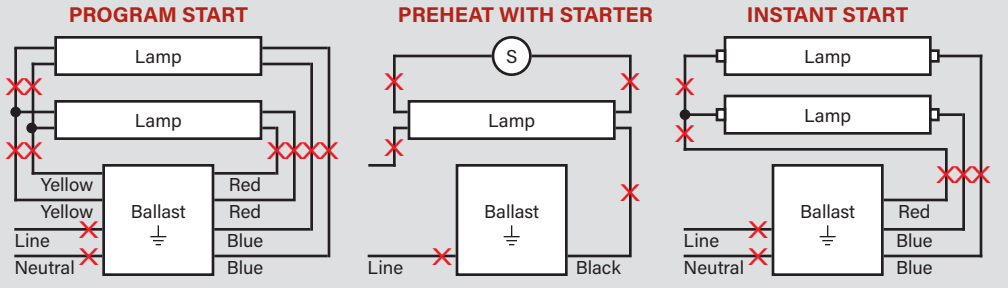

CAUTION: Instant start ballasts have *shunted* lampholders.

2. Rewire fixture as shown below.

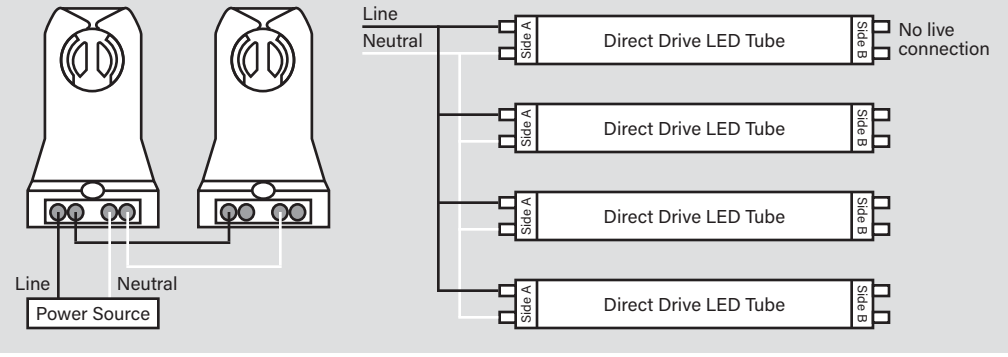

TYPICAL NON-SHUNTED LAMPHOLDER

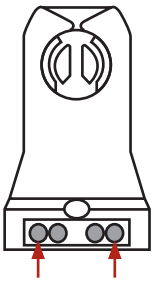

Connect wires directly to these terminals

CAUTION: FOR SINGLE-ENDED WIRING USE *ONLY* NON-SHUNTED LAMPHOLDERS.

For Single-ended wiring, do not install product in a fixture with shunted lampholders (found in all fixtures using instant start ballasts). If the current lampholders are shunted, remove them and replace them with non-shunted lampholders. Make new connections directly to terminals as indicated above. Keystone can provide any style replacement lampholders. Call us at 800-464-2680.

DOUBLE-ENDED WIRING DIAGRAM

1. Cut all existing connections to ballast as shown below and remove ballast. See *Figure A* above for typical ballast configurations.

2. Re-wire fixture as shown below. For double-ended wiring, use either shunted or non-shunted lampholders.

NOTE: There should not be any exposed wires at the end of installation.

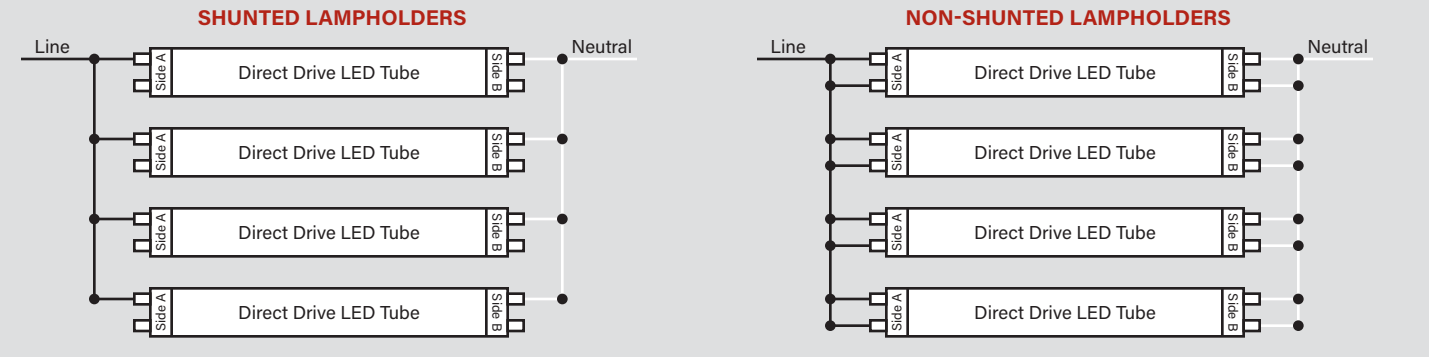

SINCE 1945 KEYSTONE | DIRECTDRIVE DX2

SINGLE- OR DOUBLE-ENDED LINE VOLTAGE LED TUBES

KT-LED25T8-48G-830-DX2

T8 LED LAMP

PHYSICAL SPECIFICATIONS

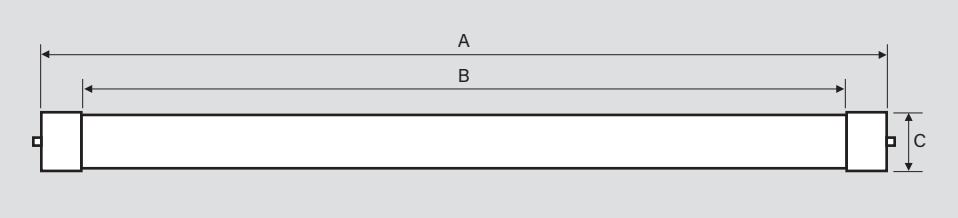

LAMP DIMENSIONS

A (Body Length)	47.15"
B (Illuminated Length)	42.63"
C (Diameter)	1.10"

NOMINAL LENGTH: 48"

BASE TYPE: G13 (Medium Bi-Pin)

ORDERING INFORMATION

ORDER CODE	PACK QTY.	UPC	EASY CODE	DLC PRODUCT ID
KT-LED25T8-48G-830-DX2-CP	25	TBD	TBD	PL3XW0KX0HOB
KT-LED25T8-48G-835-DX2-CP	25	843654123219	KIG-04	PL6OFVN3TWZ2
KT-LED25T8-48G-840-DX2-CP	25	843654123226	EPY-41	PL8DJCDUWUD0
KT-LED25T8-48G-850-DX2-CP	25	843654123233	TME-40	PL1X888X4SI1
KT-LED25T8-48G-865-DX2-CP	25	TBD	TBD	PLU5BG0A4Q6A

CATALOG NUMBER BREAKDOWN

KT-	LED	25	T8-	48	G-	8	XX-	DX2-	CP
1		2	3	4	5	6	7	8	9	10

1. **Keystone Technologies**
2. **LED Lamp**
3. **Wattage**
4. **Lamp Type**
5. **Nominal Length (Inches)**
6. **Glass Construction**
7. **80 CRI**
8. **Color Temperature**
9. **Single- or Double-Ended Wiring**
10. **Packaging Style**