KTLD-45-UV-PS850-54-VDIM-LS4

CONSTANT CURRENT LED DRIVER

DESCRIPTION

LED Driver | 45W | 120–277Vac Input
700/750/800/850mA Output Current | 30-54Vdc Output Voltage

Class P Class 2 RoHS Compliant 10 YEAR LIMITED WARRANTY

ELECTRICAL SPECIFICATIONS

Input Voltage Range	120–277Vac ±10%
Frequency	50/60 Hz
Power Factor	>0.9 at 80-100% Load Conditions
Inrush Current	<20A at 120Vac Input
Max. Input Current	0.51A at 120Vac Input
THD	<20% for 80-100% Load Conditions at 120Vac Input
Load Regulation	±2%
Line Regulation	±2%
Output Tolerance	±5% at Full Load Condition
Turn-On Delay Time	<0.5s at Full Load Condition
Overshoot	<10% at Full Load Condition
No Load Power Consumption	<1W
Ripple and Noise (pk-pk)	<10%
Surge Rating	2.5kV, ANSI/IEEE C62.41
Dimming	0-10V Dimming, Dim to Off
Protection	▪ **Over Voltage Protection:** Hiccup mode. Protection will trigger when load voltage exceeds specified output voltage and will auto recover after the fault mode is removed. ▪ **Over Current Protection:** Hiccup mode. Protection will trigger when load current exceeds specified output current and will auto recover after the fault mode is removed. ▪ **Short Circuit Protection:** Hiccup mode. Protection will trigger when short circuited and will auto recover after the fault mode is removed.

PRODUCT SPECIFICATIONS DETAILED

Max. Output Power	Output Current	Output Voltage	Typical Efficiency at 120V	Typical Efficiency at 277V	Class 2	
					US	Canada
45W	700mA	30-54Vdc	89%	90%	✓	✓
	750mA					
	800mA					
	850mA					

PRELIMINARY

KTLD-45-UV-PS850-54-VDIM-LS4

CONSTANT CURRENT LED DRIVER

WIRING SPECIFICATIONS

WIRING DIAGRAM

Input	12", UL 1015 #18AWG (Black and White)
Output	12", UL 1569 #18AWG (Red and Blue)
Dimming	12", UL 1569 #22AWG (Purple and Pink)

PHYSICAL SPECIFICATIONS

KTLD-45-UV-PS850-54-VDIM-LS4

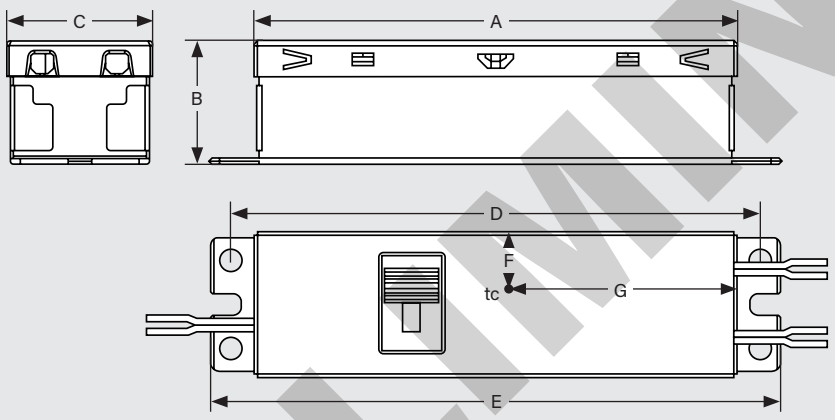

LS4 Case	
A	5.16"
B	1.09"
C	1.30"
D	5.56"
E	5.95"
F	0.58"
G	2.34"

ENVIRONMENTAL SPECIFICATIONS

Operating Temperature	-40°C/-40°F to 50°C/122°F
Storage Temperature	-40°C/-40°F to 80°C/176°F
Humidity	10% to 90%
MTBF	>200,000 Hours, Full Load at 25°C/77°F Ambient Temperature
Life Rating	>50,000 Hours, Full Load at 75°C/167°F Case Temperature
Maximum Case Temperature	90°C/194°F
Maximum Case Temperature (tc) for 5-Year Warranty	75°C/167°F

SAFETY AND EMC COMPLIANCE

UL/cUL	UL 8750 Class P CAN/CSA-C22.2 No. 250.13
FCC, 47CFR Part 15	ANSI C63.4:2014 - Class B
EN61000-3-2	Harmonic Current Emissions Class C

PRELIMINARY

KTLD-45-UV-PS850-54-VDIM-LS4

CONSTANT CURRENT LED DRIVER

ORDERING INFORMATION

Catalog Number	Packaging Style	Pack QTY	Item Status	UPC	Easy Code
KTLD-45-UV-PS850-54-VDIM-LS4	Carton Pack	20	Quick Ship	843654181066	ZIG-07

CATALOG NUMBER BREAKDOWN

KTLD-45-UV-PS850-54-VDIM-LS4

1 2 3 4 5 6 7 8

1 **Keystone Technologies LED Driver**
2 **Max. Output Wattage**
3 **120–277V Input**
4 **Power Select Series**
5 **Max. Output Current**
6 **Max. Output Voltage**
7 **0–10V Dimming**
8 **Case Style**

PRELIMINARY