LMCP Panel Retrofit Kits

DLM panel intelligence upgrades legacy relay panels without new wiring or relay replacement

Easy setup via LMCT-100 handheld configuration tool

Compatible with several commercially available and installed lighting relays

Native BACnet MS/TP connectivity

Can connect to Digital Lighting Management switches, sensors and input devices

PROJECT
LOCATION/TYPE

Product Overview

Description

The LMCP retrofit kits provide a simple upgrade option to existing WattStopper Lighting Integrator and other legacy relay panels (GE and Horton Controls SWC, SWS, SWSP and TLC panels). The kit is compatible with several common lighting relays, including HDR, RR7, and RR9. With the intelligence cards, the panel is fully compatible with the DLM technology platform and enables an optional MS/TP network.

Operation

Legacy panels are easily retrofitted with the LMCP kit assemblies; the legacy interior items are removed and the new LMRD and LMPI assembly components of the retrofit kit are installed. Legacy relays and power supply remain intact. The retrofit components provide identical grouping functionality via smartwiring so that relays can be grouped by pushbutton programming. Relays and groups can be also be configured via an LMCT-100 Configuration Tool (version 5.14, or higher). Relays in each LMCP retrofit panel can be assigned to up to 99 automation groups in any combination. Each group can respond to unique scheduled events and light/dark photocell operations set up via an LMCT-100. A group can also respond to schedules sent from a Segment Manager or BACnet-enabled building automation system (BAS).

Networking

While control using a DLM Segment Manager would be ideal for many applications, multiple retrofit panels may be networked together for global control operation without a Segment Manager or BAS. The LMCP retrofit kit provides a native-BACnet integration solution via BACnet MS/TP. Relay, group, and control device status, including occupancy sensor status, are available as BACnet objects. When a WattStopper Segment Manager is used, it automatically recognizes LMCP panels and maps them to the browser-based user interface so configuration requires minimal additional setup.

Applications

LMCP retrofit panel kits provide effective, code-compliant control of building exterior lighting as well as larger interior areas. Typical applications for scheduled control, where legacy panels are often used, include office building lobbies, corridors, loading docks, etc., as well as school gymnasiums, common areas and hallways. LMCP retrofit panels are well-suited for replacing legacy panels near existing branch circuit breakers, and the new capability to configure digital switch and sensor devices and load parameters enables a system to execute complex operational sequences.

Features

- Available for interiors sized for 8, 24, or 48 relays, also GE-12 interior size
- Two free-topology DLM Category 5e local networks for DLM sensors, switches, and LMIO series input modules
- Additional power available for low voltage switches or accessories
- Compatible with legacy installed switches and control devices; legacy occupancy sensors (with LMIO-201)

Specifications

- Input voltage options, 120/277V 60 Hz, 120/347V, 60 Hz, 240V 50 Hz
- Class 2 connection to two independent DLM local networks:
  - 24VDC output, up to 250mA across 2 RJ45 ports per local network
- Free-topology DLM local network segments may include digital switches and sensors; Category 5e cable, up to 1,000 ft. total per local network
- Terminals for connection to DLM segment network (BACnet MS/TP)
- Segment network parameters:
  - WattStopper LM-MSTP wire
  - Linear topology; 4000 ft. maximum per segment
- Accessory power available:
  - LMCP-xx8, 800 mA @ 24VDC
  - LMCP-xx24, 1000 mA @ 24VDC
  - LMCP-xx48, 1000 mA @ 24VDC
- Operating conditions: for indoor use only; 32-131°F (0 – 55°C); 5-95% RH, non-condensing
- Five year warranty

Installation

Installing LMCP Retrofit Kit Components

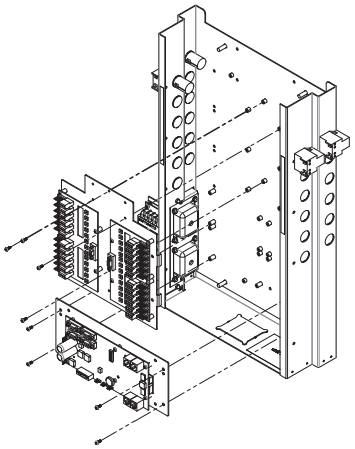

Installing LMCP Retrofit components into a 24-relay size legacy panel interior.

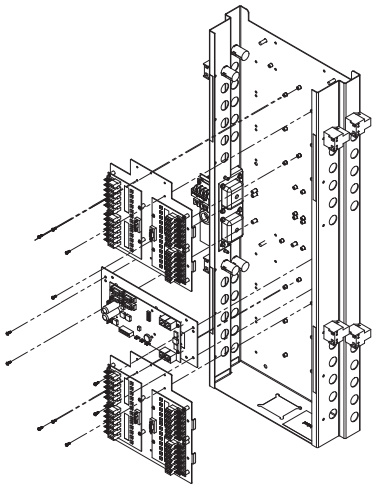

Installing LMCP Retrofit components into a 48-relay size legacy panel interior.

Panel Compatibility Chart

Panel Retrofit Kit Cat. No	Compatible with
LMCP-LI8, LMCP-LI24, LMCP-LI48	**WattStopper* Lighting Integrator Panels:** Lighting Integrator (LI), Lighting Integrator Automation (LIA), Lighting Integrator BACnet (LIB), Lighting Integrator DMX (LID)
LMCP-GE12, LMCP-GE24, LMCP-GE48	**GE TLC Panels**:** SWC, SWS, SWSP, GE TLC Level 1, GE TLC Level 2, GE TLC Level 3 **Horton Controls Panels:** SWC, SWS, SWSP, TLC

*WattStopper Specialized Solution Panels (ACP-net) and Contactor Panels not supported.
**Earlier GE Learn Mode and GE PLC model panels not supported.

Ordering Information

Catalog No.	Interior Capacity
☐ LMCP-LI8	LMCP Retrofit Kit for Lighting Integrator panels, 8 relay capacity
☐ LMCP-LI24	LMCP Retrofit Kit for Lighting Integrator panels, 24 relay capacity
☐ LMCP-LI48	LMCP Retrofit Kit for Lighting Integrator panels, 48 relay capacity
☐ LMCP-GE12	LMCP Retrofit Kit for GE and Horton Controls panels, 12 relay capacity
☐ LMCP-GE24	LMCP Retrofit Kit for GE and Horton Controls panels, 24 relay capacity
☐ LMCP-GE48	LMCP Retrofit Kit for GE and Horton Controls panels, 48 relay capacity
Options	
☐ LMCT-100	Digital Wireless Configuration Tool
☐ LMSM-3E	DLM Segment Manager, 3 MS/TP segment networks, up to 120 DLM rooms
☐ LMSM-6E	DLM Segment Manager, for use with NB ROUTERS, up to 300 DLM rooms