THIS COPY IS PROVIDED ON A RESTRICTED BASIS AND IS NOT TO BE USED IN ANY WAY DETRIMENTAL TO THE INTERESTS OF PANDUIT CORP.

PANDUIT PART #	STUD SIZE	DIMENSIONS - in. [mm]				
		A ± .02 [0,5]	W ± .01 [0,3]	C ± .02 [0,5]	M ± .02 [0,5]	H ± .01 [0,3]
P14-6RHT6	#6	.62 [15,75]	.25 [6,35]	.20 [5,08]	.50 [12,70]	.15 [3,81]
P14-8RHT6	#8	.71 [18,03]	.31 [7,87]	.25 [6,35]	.55 [13,97]	.17 [4,32]
P14-10RHT6	#10	.71 [18,03]	.31 [7,87]	.25 [6,35]	.55 [13,97]	.20 [5,08]

UL TOOLS
CT-100B - #16-14 AWG CT-1570 - #18-14 AWG CT-2300 - #18-14 AWG CT-2500 (CT-2570CH) - #18-14 AWG

METRIC EQUIVALENT
#18 AWG = 1,0 mm2 #16 AWG = 1,5 mm2 #14 AWG = 2,5 mm2

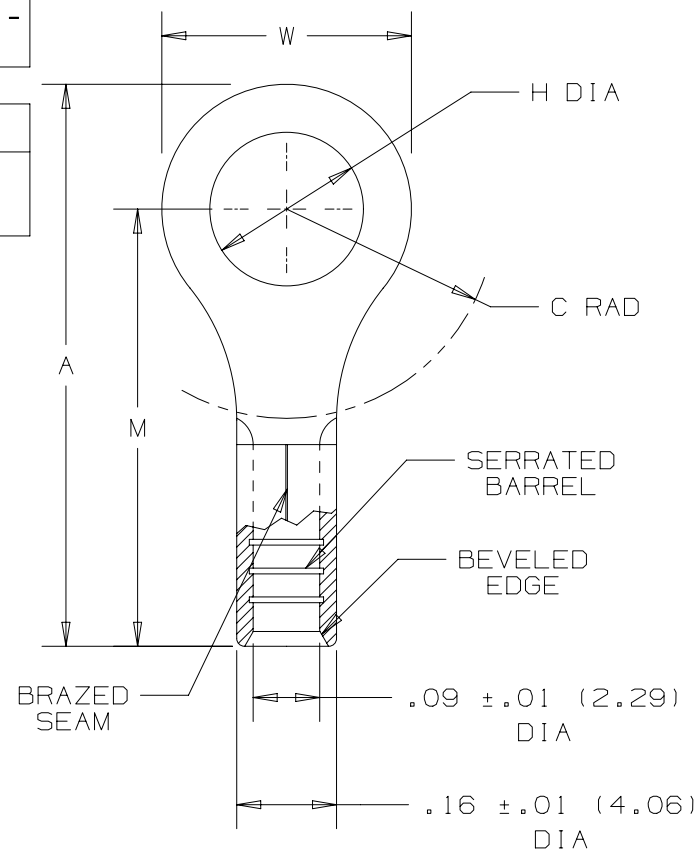

NOTES:
1. UL 486A/B LISTED FOR
   A. SOLID OR STRANDED WIRE.
   B. 650F [343 C] MAXIMUM TEMPERATURE RATING
   C. 600V MAX BLDG WIRE
      (1000V MAX IN SIGNS, FIXTURES & LUMINARIES)
   D SOME TOOLS HAVE EXPANDED WIRE SIZES. SEE TOOL TABLES FOR AWG WIRE SIZES SUPPORTED BY EACH TOOL.

2. SEE www.panduit.com FOR PACKAGE QUANTITIES.

3. .MATERIAL:
   A. STAMPING - .032" [0,8] THICK COPPER, TIN PLATED

4. DIMENSIONS IN BRACKETS ARE METRIC EQUIVALENT.

5. WIRE STRIP LENGTH: 9/32" +1/32 -0 [7,1mm +0,8 -0]

c UL us
LISTED
587H
E52164

REV	DATE	BY	CHK	APR	DESCRIPTION	ECN
08A	01-20-25	DPOI	ACC	JSUN	ADDED METRIC EQUIVALENT CHART. MODIFY NOTES & GAUGE RANGE.	010191/00
07	5/17	JHNU	TMR	RGB	UPDATED TOOL CHART FORMAT	N41266BA-A41266
06	06/14	MBY	JHNU	RGB	ADDED cULus LOGO, REVISED NOTES, MOVED TOOLS TO TABLE, UPDATED BORDER	N41266BA-A41266

TITLE
#16-14 BARREL NON-INSULATED RING TONGUE, HIGH TEMPERATURE, 650° F

CUSTOMER DRAWING

ITEM REVISION NAME: N41266BA/08

DATASET FILE NAME: N41266BA/08

PANDUIT

UNLESS OTHERWISE SPECIFIED, DIMENSIONAL TOLERANCES ARE: IN [mm]
.X ± .XXX ±
.XX ± ANGLES ±
THIRD ANGLE PROJECTION

MATERIAL: SEE NOTE 3

DRAWING NUMBER: A41266

DRAWN BY	DATE	CHK	SCALE	SHT 1 OF 1	SIZE
DAW			NONE		A

D10100DA/16